PROJECT NAME: GALVANIZING CRANE	DRAWING NO.: 1090201

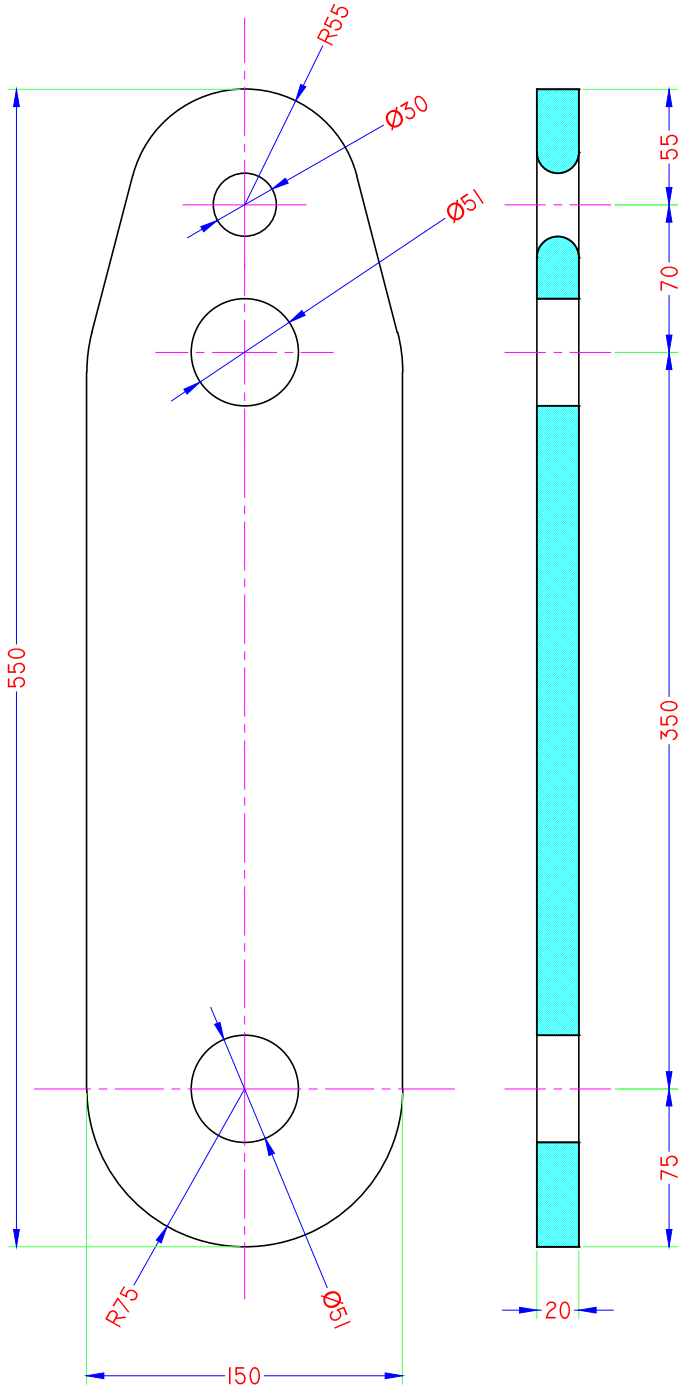

ITEM	PART NO.	TECHNICAL DESCRIPTION		QUANTITY	MATERIAL	UNIT WEIGHT
SUM	1090201	PLATE 20 MM TH. 152 X 550 MM	152 X 20 X 550	4	PLATE	11.032 KG STEEL

CADSOUL
WEB SITE : WWW.CADSOUL.COM
E-MAIL: CADSOUL@CADSOUL.COM

DRAWING TITLE: PLATE 20 MM TH. 152 X 550 MM

CLIENT NAME:

DESIGNED BY:
CHECKED BY:
APPROVED BY:

DRAWING NO.:	FINISH MATERIAL	SHEET	SCALE	DATE
1090201		12:43	DIMS IN MM	30/06/2013